Package:	PDIP14	Pin No:	13	12	11	4	3	2	10	9	8	7	6	5
			Port A ▼						Port C ▼					
Module	Function	Direction	0	1	2	3	4	5	0	1	2	3	4	5
ADC ▼	ANx	input												
	VREF+	input												
	VREF-	input												
CCP1	CCP1	output												
EUSART ▼	RX	input												
	TX	output												
MSSP1 ▼	SCL1	in/out												
	SDA1	in/out												
OSC	CLKOUT	output												
PWM5	PWM5	output												
PWM6	PWM6	output												
Pin Module ▼	GPIO	input												
	GPIO	output												
RESET	MCLR	input												

ADC - Result Aligment right
CCP1 - PWM Timer 2 0-311 (0-100%)
EUSART - redirect STDIO to USART
MSSP1 - I2C
PWM5/6 - 0-199 (0-100%) Timer6
TIMER 2 - 20mS 50Hz prescaler 1:64
TIMER 6 - 200uS 5KHz

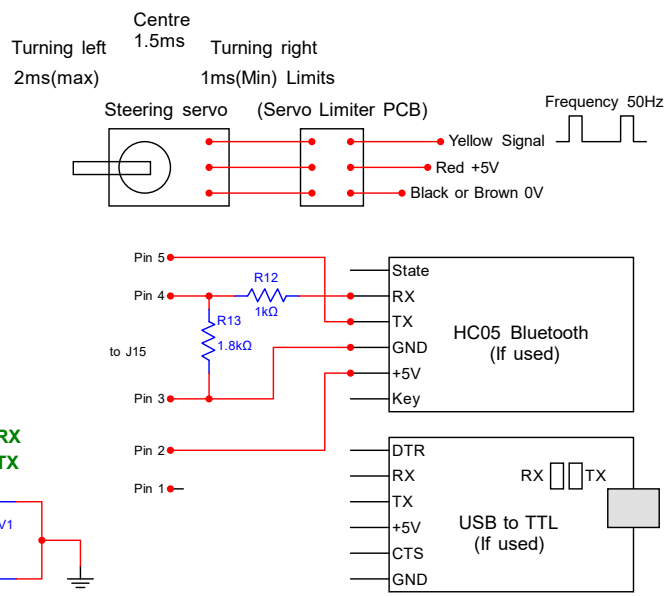

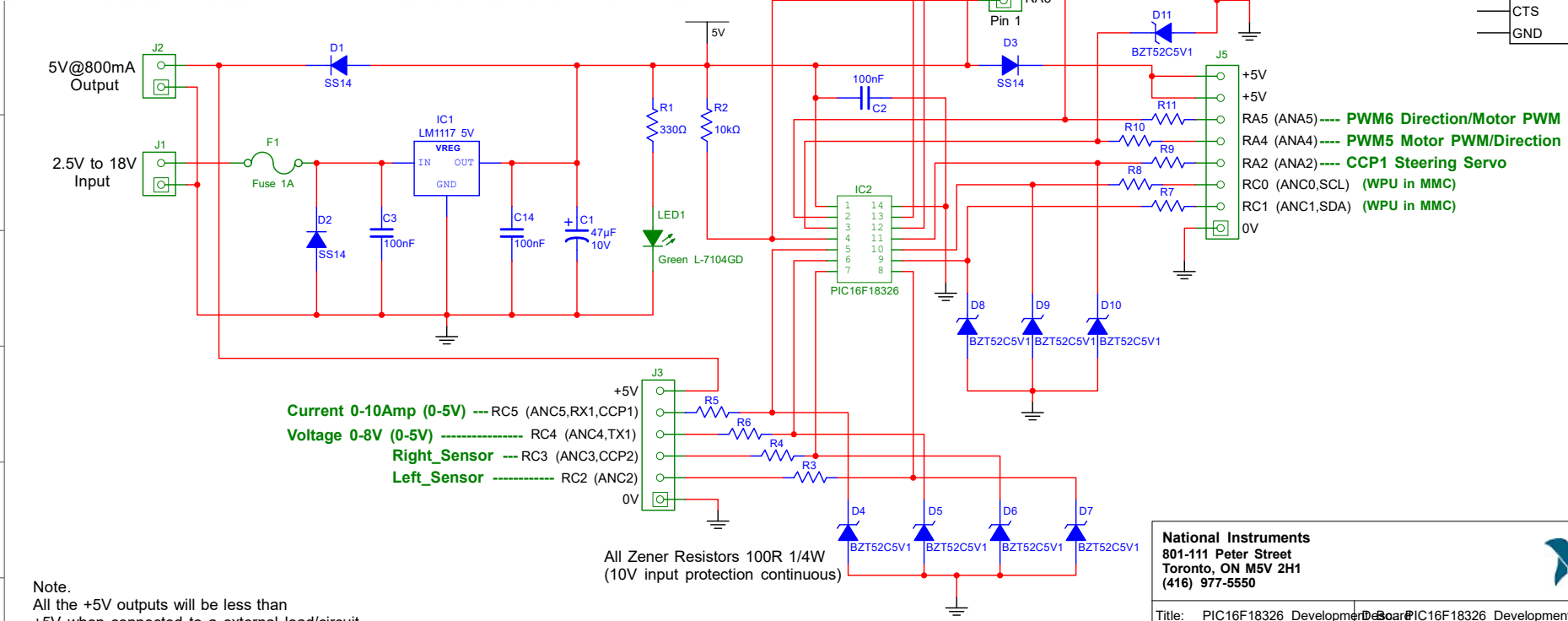

All Zener Resistors 100R 1/4W
(10V input protection continuous)

Note.
All the +5V outputs will be less than
+5V when connected to a external load/circuit.
This is caused by the SS14 protection diode
forward voltage drop . Typicaly 0.5V

National Instruments
801-111 Peter Street
Toronto, ON M5V 2H1
(416) 977-5550

Title: PIC16F18326 Development Board	Description: PIC16F18326 Development Board	
Designed by:	Document No:	Revision:
Checked by:	Date: 29/01/2024	Size: A3
Approved by:	Sheet 1 of 1	